REV	Description	DATE	BY
01	bc10 mp1 作成	30 Jul 2010	Ryuchi
02	PCB ネットスワップ反映	11 Aug 2010	Ryuchi

CONTENTS

PAGE NO.	SCHEMATIC PAGE
1	bc10 Cover page
2	bc10 MAIN Power and USB OTG
3	bc10 OMAP 1 of 3
4	bc10 OMAP35330 2 of 3 and Peripherais device
5	bc10 OMAP3530 3 of 3 and Power rails
6	bc10 TPS65950 USB, Audio, Clock
7	bc10 TPS65950 Power rails
8	bc10 USB Host interface
9	bc10 SD, uSD, iPod30pin
10	bc10 DVI-D Interface
11	bc10 AMOLED Interface
12	bc10 AMOLED Power Supply
13	bc10 Keypad, 20ch GPS, 6-axis senser

BeatCraft, Inc.

Title	bc10 Cover page	
Size B	Document Number bc10-001-0003	Rev 02
Date: Wednesday, August 11, 2010	Sheet 1 of 13	

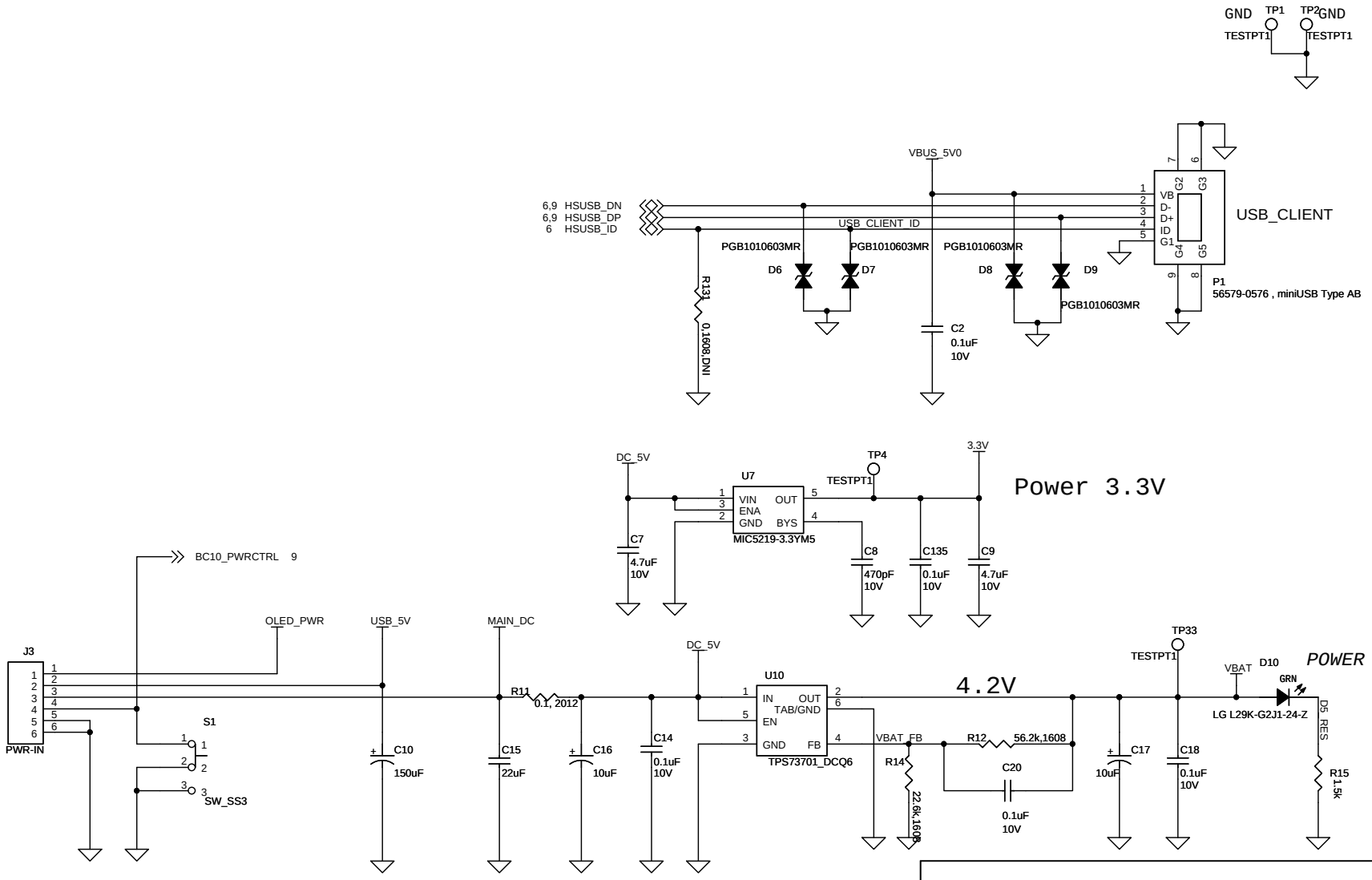

BeatCraft, Inc.

Title	bc10 MAIN Power and USB OTG	
Size B	Document Number bc10-001-0003	Rev 02
Date: Wednesday, August 11, 2010	Sheet 2 of 13	

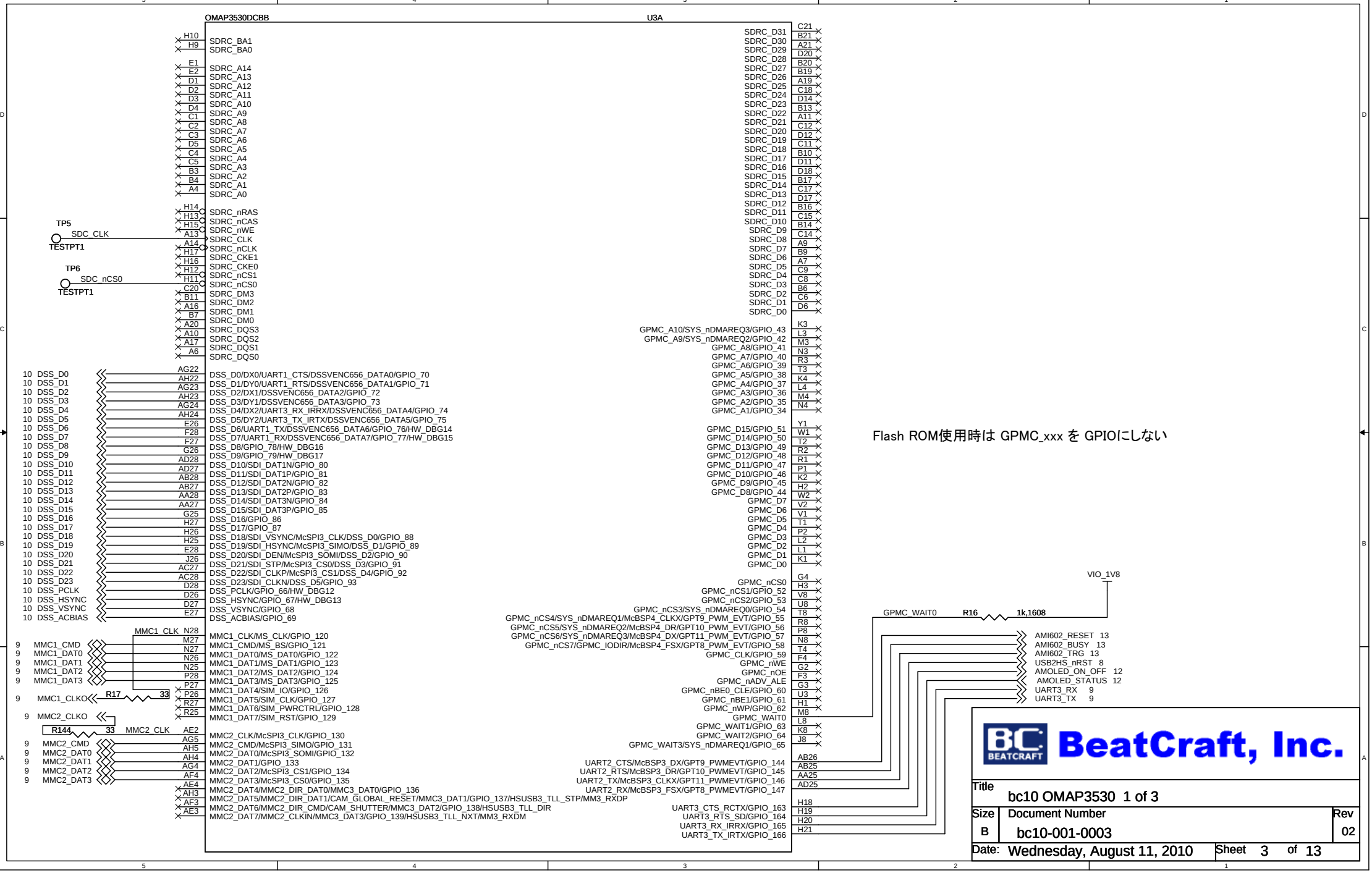
OMAP3530DCBB
U3A
SDRC_BA1 H10
SDRC_BA0 H9
SDRC_A14 E1
SDRC_A13 E2
SDRC_A12 D1
SDRC_A11 D2
SDRC_A10 D3
SDRC_A9 D4
SDRC_A8 C1
SDRC_A7 C2
SDRC_A6 C3
SDRC_A5 D5
SDRC_A4 C4
SDRC_A3 C5
SDRC_A2 B3
SDRC_A1 B4
SDRC_A0 A4
SDRC_nRAS H14
SDRC_nCAS H13
SDRC_nWE H15
SDRC_CLK A13
SDRC_nCLK A14
SDRC_CKE1 H17
SDRC_CKE0 H16
SDRC_nCS1 H12
SDRC_nCS0 H11
SDRC_DM3 C20
SDRC_DM2 B11
SDRC_DM1 A16
SDRC_DM0 B7
SDRC_DQS3 A20
SDRC_DQS2 A10
SDRC_DQS1 A17
SDRC_DQS0 A6
TP5
SDC_CLK
TESTPT1
TP6
SDC_nCS0
TESTPT1
10 DSS_D0 AG22
10 DSS_D1 AH22
10 DSS_D2 AG23
10 DSS_D3 AH23
10 DSS_D4 AG24
10 DSS_D5 AH24
10 DSS_D6 E26
10 DSS_D7 F28
10 DSS_D8 F27
10 DSS_D9 G26
10 DSS_D10 AD28
10 DSS_D11 AD27
10 DSS_D12 AB28
10 DSS_D13 AB27
10 DSS_D14 AA28
10 DSS_D15 AA27
10 DSS_D16 G25
10 DSS_D17 H27
10 DSS_D18 H26
10 DSS_D19 H25
10 DSS_D20 E28
10 DSS_D21 J26
10 DSS_D22 AC27
10 DSS_D23 AC28
10 DSS_PCLK D28
10 DSS_HSYNC D26
10 DSS_VSYNC D27
10 DSS_ACBIAS E27
DSS_D0/DX0/UART1_CTS/DSSVENC656_DATA0/GPIO_70
DSS_D1/DY0/UART1_RTS/DSSVENC656_DATA1/GPIO_71
DSS_D2/DX1/DSSVENC656_DATA2/GPIO_72
DSS_D3/DY1/DSSVENC656_DATA3/GPIO_73
DSS_D4/DX2/UART3_RX_IRRX/DSSVENC656_DATA4/GPIO_74
DSS_D5/DY2/UART3_TX_IRTX/DSSVENC656_DATA5/GPIO_75
DSS_D6/UART1_TX/DSSVENC656_DATA6/GPIO_76/HW_DBG14
DSS_D7/UART1_RX/DSSVENC656_DATA7/GPIO_77/HW_DBG15
DSS_D8/GPIO_78/HW_DBG16
DSS_D9/GPIO_79/HW_DBG17
DSS_D10/SDI_DAT1N/GPIO_80
DSS_D11/SDI_DAT1P/GPIO_81
DSS_D12/SDI_DAT2N/GPIO_82
DSS_D13/SDI_DAT2P/GPIO_83
DSS_D14/SDI_DAT3N/GPIO_84
DSS_D15/SDI_DAT3P/GPIO_85
DSS_D16/GPIO_86
DSS_D17/GPIO_87
DSS_D18/SDI_VSYNC/McSPI3_CLK/DSS_D0/GPIO_88
DSS_D19/SDI_HSYNC/McSPI3_SIMO/DSS_D1/GPIO_89
DSS_D20/SDI_DEN/McSPI3_SOMI/DSS_D2/GPIO_90
DSS_D21/SDI_STP/McSPI3_CS0/DSS_D3/GPIO_91
DSS_D22/SDI_CLKP/McSPI3_CS1/DSS_D4/GPIO_92
DSS_D23/SDI_CLKN/DSS_D5/GPIO_93
DSS_PCLK/GPIO_66/HW_DBG12
DSS_HSYNC/GPIO_67/HW_DBG13
DSS_VSYNC/GPIO_68
DSS_ACBIAS/GPIO_69
MMC1_CLK N28
9 MMC1_CMD M27
9 MMC1_DAT0 N27
9 MMC1_DAT1 N26
9 MMC1_DAT2 N25
9 MMC1_DAT3 P28
9 MMC1_CLKO R17 33 P27
9 MMC2_CLKO P26
R144 33 MMC2_CLK R27
R25
9 MMC2_CMD AE2
9 MMC2_DAT0 AG5
9 MMC2_DAT1 AH5
9 MMC2_DAT2 AH4
9 MMC2_DAT3 AG4
AF4
AE4
AH3
AF3
AE3
MMC1_CLK/MS_CLK/GPIO_120
MMC1_CMD/MS_BS/GPIO_121
MMC1_DAT0/MS_DAT0/GPIO_122
MMC1_DAT1/MS_DAT1/GPIO_123
MMC1_DAT2/MS_DAT2/GPIO_124
MMC1_DAT3/MS_DAT3/GPIO_125
MMC1_DAT4/SIM_IO/GPIO_126
MMC1_DAT5/SIM_CLK/GPIO_127
MMC1_DAT6/SIM_PWRCTRL/GPIO_128
MMC1_DAT7/SIM_RST/GPIO_129
MMC2_CLK/McSPI3_CLK/GPIO_130
MMC2_CMD/McSPI3_SIMO/GPIO_131
MMC2_DAT0/McSPI3_SOMI/GPIO_132
MMC2_DAT1/GPIO_133
MMC2_DAT2/McSPI3_CS1/GPIO_134
MMC2_DAT3/McSPI3_CS0/GPIO_135
MMC2_DAT4/MMC2_DIR_DAT0/MMC3_DAT0/GPIO_136
MMC2_DAT5/MMC2_DIR_DAT1/CAM_GLOBAL_RESET/MMC3_DAT1/GPIO_137/HSUSB3_TLL_STP/MM3_RXDP
MMC2_DAT6/MMC2_DIR_CMD/CAM_SHUTTER/MMC3_DAT2/GPIO_138/HSUSB3_TLL_DIR
MMC2_DAT7/MMC2_CLKIN/MMC3_DAT3/GPIO_139/HSUSB3_TLL_NXT/MM3_RXDM
SDRC_D31 C21
SDRC_D30 B21
SDRC_D29 A21
SDRC_D28 D20
SDRC_D27 B20
SDRC_D26 B19
SDRC_D25 A19
SDRC_D24 C18
SDRC_D23 D14
SDRC_D22 B13
SDRC_D21 A11
SDRC_D20 C12
SDRC_D19 D12
SDRC_D18 C11
SDRC_D17 B10
SDRC_D16 D11
SDRC_D15 D18
SDRC_D14 B17
SDRC_D13 C17
SDRC_D12 D17
SDRC_D11 B16
SDRC_D10 C15
SDRC_D9 B14
SDRC_D8 C14
SDRC_D7 A9
SDRC_D6 B9
SDRC_D5 A7
SDRC_D4 C9
SDRC_D3 C8
SDRC_D2 B6
SDRC_D1 C6
SDRC_D0 D6
GPMC_A10/SYS_nDMAREQ3/GPIO_43 K3
GPMC_A9/SYS_nDMAREQ2/GPIO_42 L3
GPMC_A8/GPIO_41 M3
GPMC_A7/GPIO_40 N3
GPMC_A6/GPIO_39 R3
GPMC_A5/GPIO_38 T3
GPMC_A4/GPIO_37 K4
GPMC_A3/GPIO_36 L4
GPMC_A2/GPIO_35 M4
GPMC_A1/GPIO_34 N4
GPMC_D15/GPIO_51 Y1
GPMC_D14/GPIO_50 W1
GPMC_D13/GPIO_49 T2
GPMC_D12/GPIO_48 R2
GPMC_D11/GPIO_47 R1
GPMC_D10/GPIO_46 P1
GPMC_D9/GPIO_45 K2
GPMC_D8/GPIO_44 H2
GPMC_D7 W2
GPMC_D6 V2
GPMC_D5 V1
GPMC_D4 T1
GPMC_D3 P2
GPMC_D2 L2
GPMC_D1 L1
GPMC_D0 K1
GPMC_nCS0 G4
GPMC_nCS1/GPIO_52 H3
GPMC_nCS2/GPIO_53 V8
GPMC_nCS3/SYS_nDMAREQ0/GPIO_54 U8
GPMC_nCS4/SYS_nDMAREQ1/McBSP4_CLKX/GPT9_PWM_EVT/GPIO_55 T8
GPMC_nCS5/SYS_nDMAREQ2/McBSP4_DR/GPT10_PWM_EVT/GPIO_56 R8
GPMC_nCS6/SYS_nDMAREQ3/McBSP4_DX/GPT11_PWM_EVT/GPIO_57 P8
GPMC_nCS7/GPMC_IODIR/McBSP4_FSX/GPT8_PWM_EVT/GPIO_58 N8
GPMC_CLK/GPIO_59 T4
GPMC_nWE F4
GPMC_nOE G2
GPMC_nADV_ALE F3
GPMC_nBE0_CLE/GPIO_60 G3
GPMC_nBE1/GPIO_61 U3
GPMC_nWP/GPIO_62 H1
GPMC_WAIT0 M8
GPMC_WAIT1/GPIO_63 L8
GPMC_WAIT2/GPIO_64 K8
GPMC_WAIT3/SYS_nDMAREQ1/GPIO_65 J8
UART2_CTS/McBSP3_DX/GPT9_PWMEVT/GPIO_144 AB26
UART2_RTS/McBSP3_DR/GPT10_PWMEVT/GPIO_145 AB25
UART2_TX/McBSP3_CLKX/GPT11_PWMEVT/GPIO_146 AA25
UART2_RX/McBSP3_FSX/GPT8_PWMEVT/GPIO_147 AD25
UART3_CTS_RCTX/GPIO_163 H18
UART3_RTS_SD/GPIO_164 H19
UART3_RX_IRRX/GPIO_165 H20
UART3_TX_IRTX/GPIO_166 H21
Flash ROM使用時は GPMC_xxx を GPIOにしない
VIO_1V8
GPMC_WAIT0 R16 1k,1608
AMI602_RESET 13
AMI602_BUSY 13
AMI602_TRG 13
USB2HS_nRST 8
AMOLED_ON_OFF 12
AMOLED_STATUS 12
UART3_RX 9
UART3_TX 9
BeatCraft, Inc.
Title
bc10 OMAP3530 1 of 3
Size
B
Document Number
bc10-001-0003
Rev
02
Date: Wednesday, August 11, 2010
Sheet 3 of 13

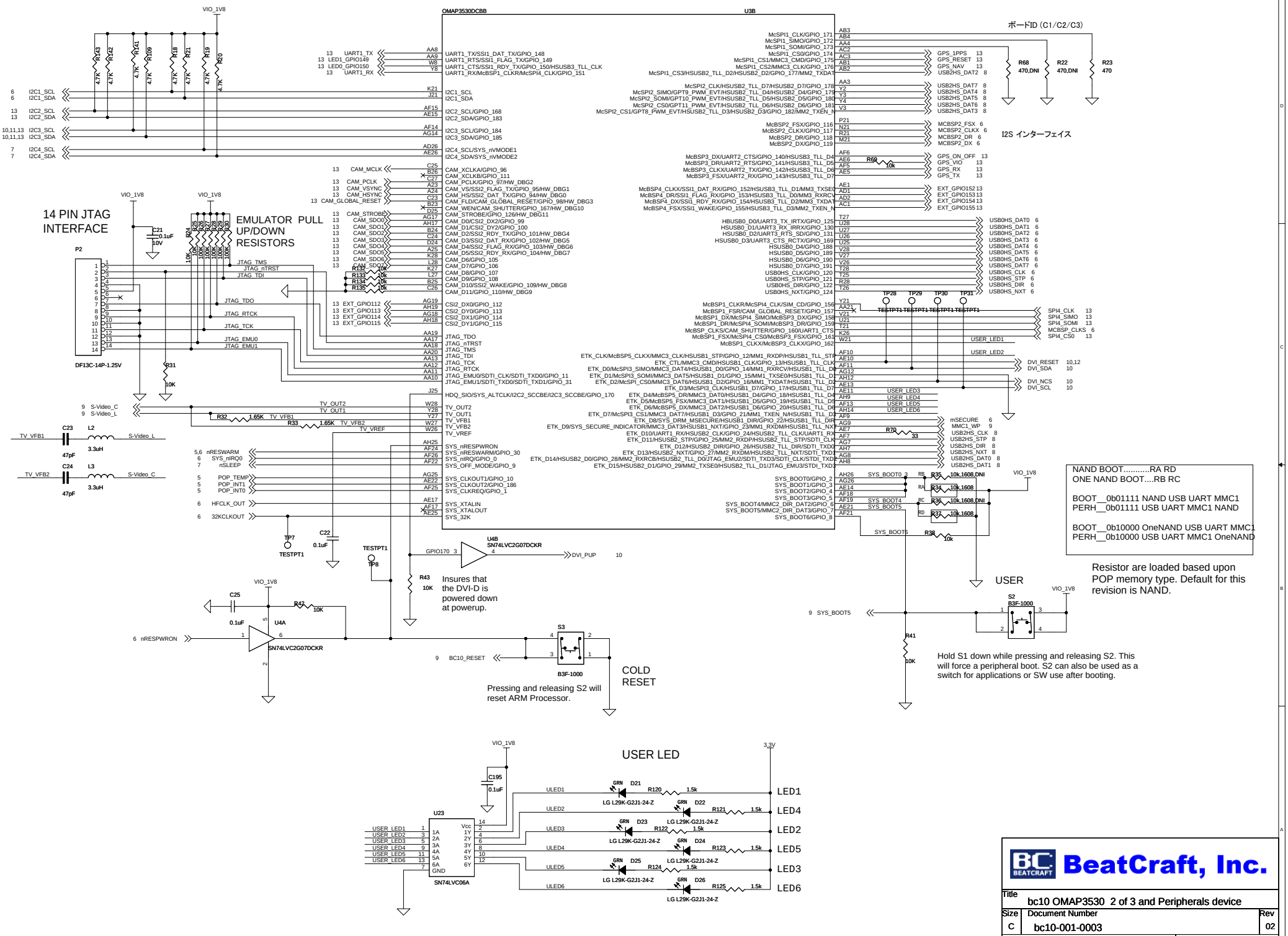
OMAP3530DCBB
U3B
VIO_1V8
14 PIN JTAG INTERFACE
EMULATOR PULL UP/DOWN RESISTORS
P2
DF13C-14P-1.25V
ボードID (C1/C2/C3)
I2S インターフェイス
NAND BOOT.....RA RD
ONE NAND BOOT....RB RC
BOOT__0b01111 NAND USB UART MMC1
PERH__0b01111 USB UART MMC1 NAND
BOOT__0b10000 OneNAND USB UART MMC1
PERH__0b10000 USB UART MMC1 OneNAND
Resistor are loaded based upon POP memory type. Default for this revision is NAND.
Insures that the DVI-D is powered down at powerup.
U4B
SN74LVC2G07DCKR
U4A
SN74LVC2G07DCKR
S3
B3F-1000
COLD RESET
Pressing and releasing S2 will reset ARM Processor.
USER
S2
B3F-1000
Hold S1 down while pressing and releasing S2. This will force a peripheral boot. S2 can also be used as a switch for applications or SW use after booting.
USER LED
U23
SN74LVC06A
LED1
LED4
LED2
LED5
LED3
LED6
BeatCraft, Inc.
Title
bc10 OMAP3530 2 of 3 and Peripherals device
Size C
Document Number
bc10-001-0003
Rev 02
Date: Wednesday, August 11, 2010
Sheet 4 of 13

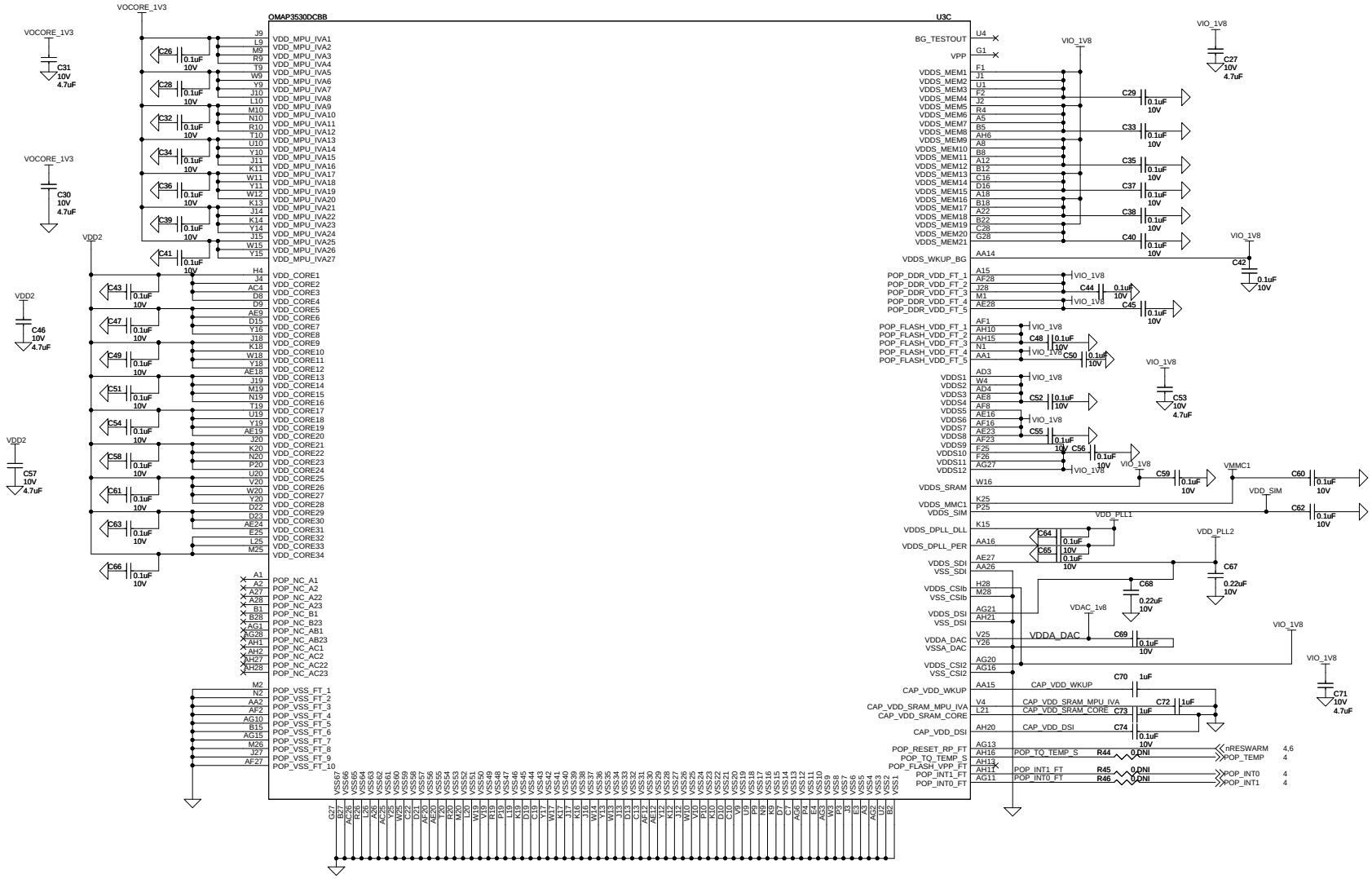

BeatCraft, Inc.

Title	bc10 OMAP3530 3 of 3 and Power rails		
Size C	Document Number bc10-001-0003		Rev 02
Date: Wednesday, August 11, 2010		Sheet 5 of 13	

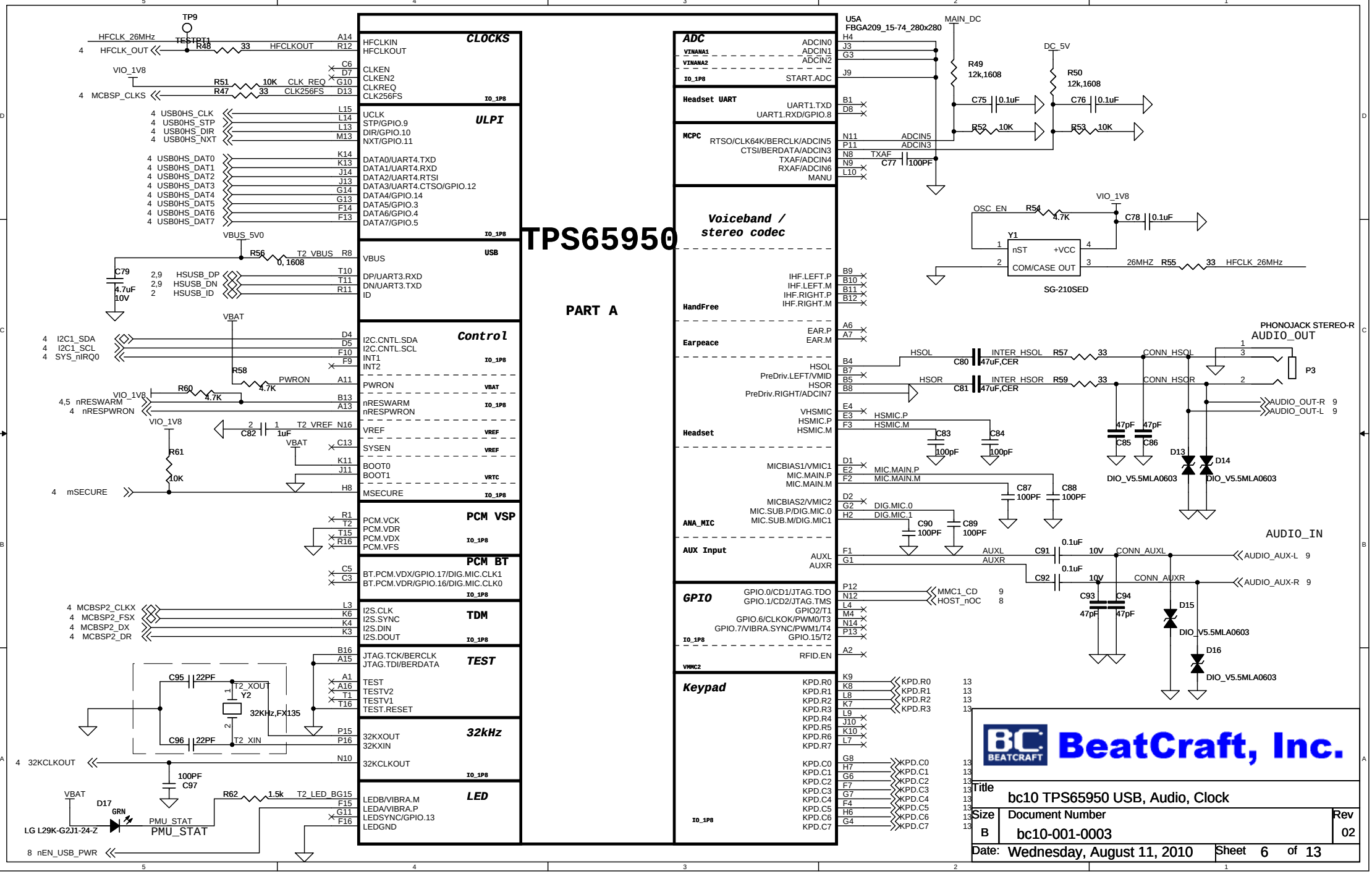
TPS65950
PART A
CLOCKS
HFCLKIN
HFCLKOUT
CLKEN
CLKEN2
CLKREQ
CLK256FS
ULPI
UCLK
STP/GPIO.9
DIR/GPIO.10
NXT/GPIO.11
DATA0/UART4.TXD
DATA1/UART4.RXD
DATA2/UART4.RTSI
DATA3/UART4.CTSO/GPIO.12
DATA4/GPIO.14
DATA5/GPIO.3
DATA6/GPIO.4
DATA7/GPIO.5
USB
VBUS
DP/UART3.RXD
DN/UART3.TXD
ID
Control
I2C.CNTL.SDA
I2C.CNTL.SCL
INT1
INT2
PWRON
nRESWARM
nRESPWRON
VREF
SYSEN
BOOT0
BOOT1
MSECURE
PCM VSP
PCM.VCK
PCM.VDR
PCM.VDX
PCM.VFS
PCM BT
BT.PCM.VDX/GPIO.17/DIG.MIC.CLK1
BT.PCM.VDR/GPIO.16/DIG.MIC.CLK0
TDM
I2S.CLK
I2S.SYNC
I2S.DIN
I2S.DOUT
TEST
JTAG.TCK/BERCLK
JTAG.TDI/BERDATA
TEST
TESTV2
TESTV1
TEST.RESET
32kHz
32KXOUT
32KXIN
32KCLKOUT
LED
LEDB/VIBRA.M
LEDA/VIBRA.P
LEDSYNC/GPIO.13
LEDGND
ADC
ADCIN0
ADCIN1
ADCIN2
START.ADC
Headset UART
UART1.TXD
UART1.RXD/GPIO.8
MCPC
RTSO/CLK64K/BERCLK/ADCIN5
CTSI/BERDATA/ADCIN3
TXAF/ADCIN4
RXAF/ADCIN6
MANU
Voiceband / stereo codec
HandFree
IHF.LEFT.P
IHF.LEFT.M
IHF.RIGHT.P
IHF.RIGHT.M
Earpeace
EAR.P
EAR.M
Headset
HSOL
PreDriv.LEFT/VMID
HSOR
PreDriv.RIGHT/ADCIN7
VHSMIC
HSMIC.P
HSMIC.M
ANA_MIC
MICBIAS1/VMIC1
MIC.MAIN.P
MIC.MAIN.M
MICBIAS2/VMIC2
MIC.SUB.P/DIG.MIC.0
MIC.SUB.M/DIG.MIC1
AUX Input
AUXL
AUXR
GPIO
GPIO.0/CD1/JTAG.TDO
GPIO.1/CD2/JTAG.TMS
GPIO2/T1
GPIO.6/CLKOK/PWM0/T3
GPIO.7/VIBRA.SYNC/PWM1/T4
GPIO.15/T2
RFID.EN
Keypad
KPD.R0
KPD.R1
KPD.R2
KPD.R3
KPD.R4
KPD.R5
KPD.R6
KPD.R7
KPD.C0
KPD.C1
KPD.C2
KPD.C3
KPD.C4
KPD.C5
KPD.C6
KPD.C7
U5A
FBGA209_15-74_280x280
MAIN_DC
DC_5V
R49 12k,1608
R50 12k,1608
C75 0.1uF
C76 0.1uF
R52 10K
R53 10K
C77 100PF
VIO_1V8
OSC_EN
R54 4.7K
C78 0.1uF
Y1
nST
+VCC
COM/CASE
OUT
SG-210SED
26MHZ
R55 33
HFCLK_26MHz
PHONOJACK STEREO-R
AUDIO_OUT
P3
HSOL
INTER_HSOL
R57 33
CONN_HSOL
C80 47uF,CER
HSOR
INTER_HSOR
R59 33
CONN_HSOR
C81 47uF,CER
AUDIO_OUT-R
AUDIO_OUT-L
C83 100pF
C84 100pF
C85 47pF
C86 47pF
D13
D14
DIO_V5.5MLA0603
C87 100PF
C88 100PF
C89 100PF
C90 100PF
AUDIO_IN
C91 0.1uF
C92 0.1uF
CONN_AUXL
CONN_AUXR
AUDIO_AUX-L
AUDIO_AUX-R
C93 47pF
C94 47pF
D15
D16
MMC1_CD
HOST_nOC
HFCLK_26MHz
TESTPT1
R48 33
HFCLKOUT
HFCLK_OUT
VIO_1V8
R51 10K
R47 33
CLK_REQ
CLK256FS
MCBSP_CLKS
USB0HS_CLK
USB0HS_STP
USB0HS_DIR
USB0HS_NXT
USB0HS_DAT0
USB0HS_DAT1
USB0HS_DAT2
USB0HS_DAT3
USB0HS_DAT4
USB0HS_DAT5
USB0HS_DAT6
USB0HS_DAT7
VBUS_5V0
R56 0, 1608
T2_VBUS
C79 4.7uF 10V
HSUSB_DP
HSUSB_DN
HSUSB_ID
VBAT
I2C1_SDA
I2C1_SCL
SYS_nIRQ0
R58 4.7K
PWRON
R60 4.7K
nRESWARM
nRESPWRON
C82 1uF
T2_VREF
R61 10K
mSECURE
MCBSP2_CLKX
MCBSP2_FSX
MCBSP2_DX
MCBSP2_DR
C95 22PF
C96 22PF
T2_XOUT
T2_XIN
Y2
32KHz,FX135
32KCLKOUT
C97 100PF
D17
GRN
LG L29K-G2J1-24-Z
PMU_STAT
R62 1.5k
T2_LED_BG
nEN_USB_PWR
BeatCraft, Inc.
Title
bc10 TPS65950 USB, Audio, Clock
Size
B
Document Number
bc10-001-0003
Rev
02
Date:
Wednesday, August 11, 2010
Sheet 6 of 13

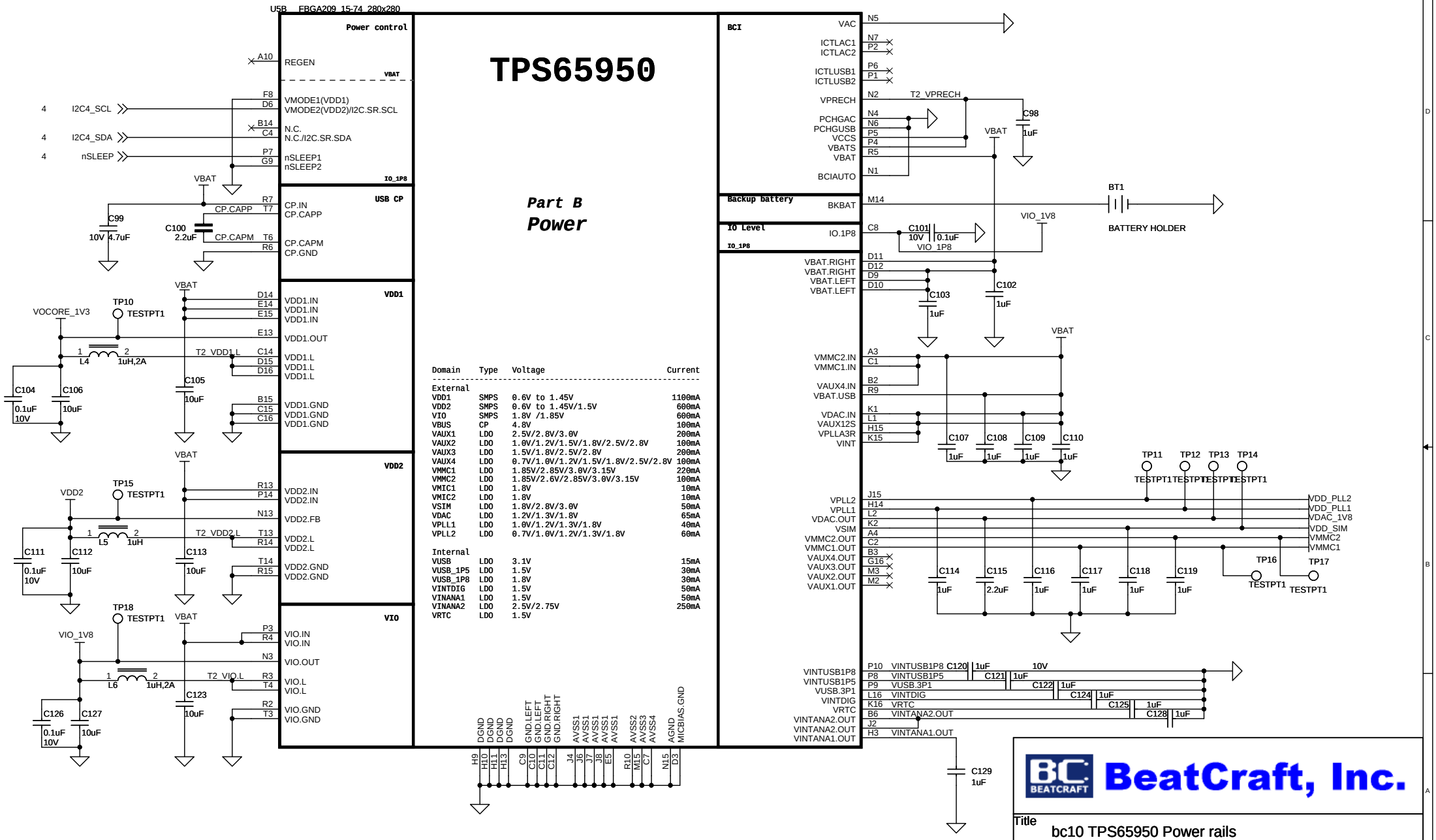

Domain	Type	Voltage	Current
External			
VDD1	SMPS	0.6V to 1.45V	1100mA
VDD2	SMPS	0.6V to 1.45V/1.5V	600mA
VIO	SMPS	1.8V /1.85V	600mA
VBUS	CP	4.8V	100mA
VAUX1	LDO	2.5V/2.8V/3.0V	200mA
VAUX2	LDO	1.0V/1.2V/1.5V/1.8V/2.5V/2.8V	100mA
VAUX3	LDO	1.5V/1.8V/2.5V/2.8V	200mA
VAUX4	LDO	0.7V/1.0V/1.2V/1.5V/1.8V/2.5V/2.8V	100mA
VMMC1	LDO	1.85V/2.85V/3.0V/3.15V	220mA
VMMC2	LDO	1.85V/2.6V/2.85V/3.0V/3.15V	100mA
VMIC1	LDO	1.8V	10mA
VMIC2	LDO	1.8V	10mA
VSIM	LDO	1.8V/2.8V/3.0V	50mA
VDAC	LDO	1.2V/1.3V/1.8V	65mA
VPLL1	LDO	1.0V/1.2V/1.3V/1.8V	40mA
VPLL2	LDO	0.7V/1.0V/1.2V/1.3V/1.8V	60mA
Internal			
VUSB	LDO	3.1V	15mA
VUSB_1P5	LDO	1.5V	30mA
VUSB_1P8	LDO	1.8V	30mA
VINTDIG	LDO	1.5V	50mA
VINANA1	LDO	1.5V	50mA
VINANA2	LDO	2.5V/2.75V	250mA
VRTC	LDO	1.5V	

BeatCraft, Inc.

Title	bc10 TPS65950 Power rails
Size	B
Document Number	bc10-001-0003
Rev	02
Date:	Wednesday, August 11, 2010
Sheet	7 of 13

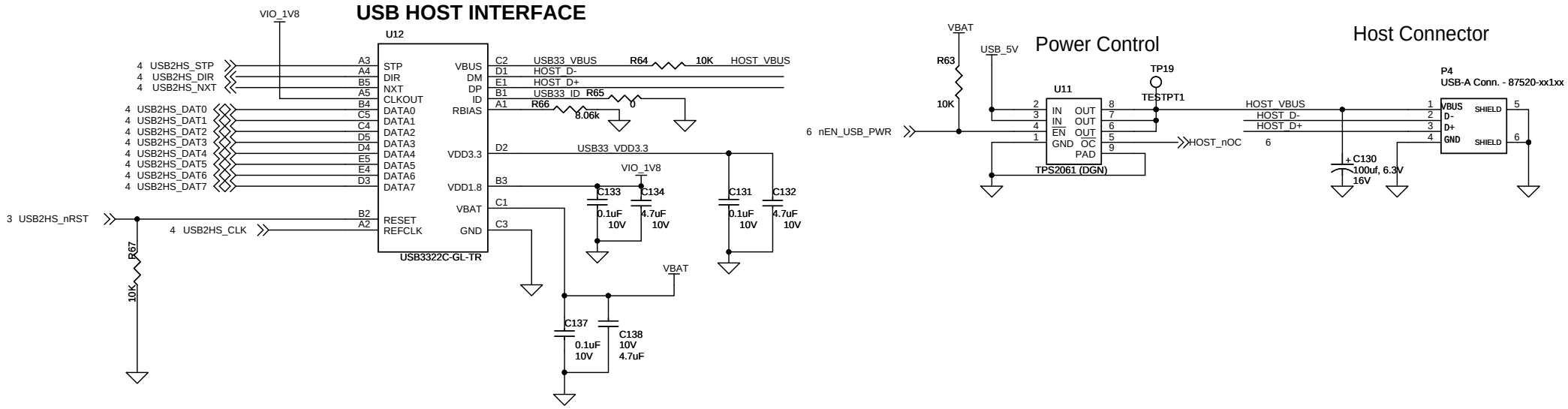

BeatCraft, Inc.

Title	bc10 USB Host interface	
Size B	Document Number bc10-001-0003	Rev 02
Date: Wednesday, August 11, 2010	Sheet 8 of 13	

microSD slot

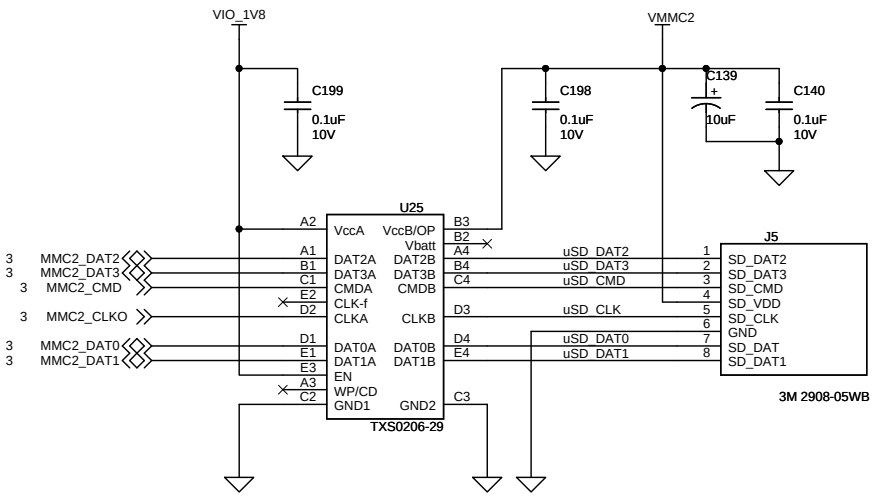

UART3 Serial Port

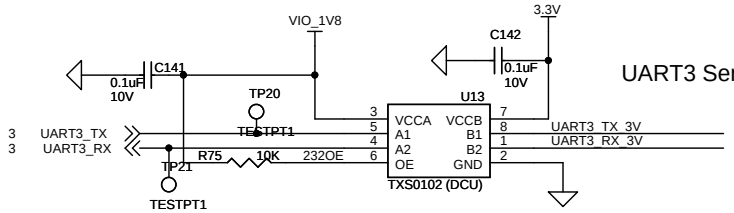

iPod 30pin Connector

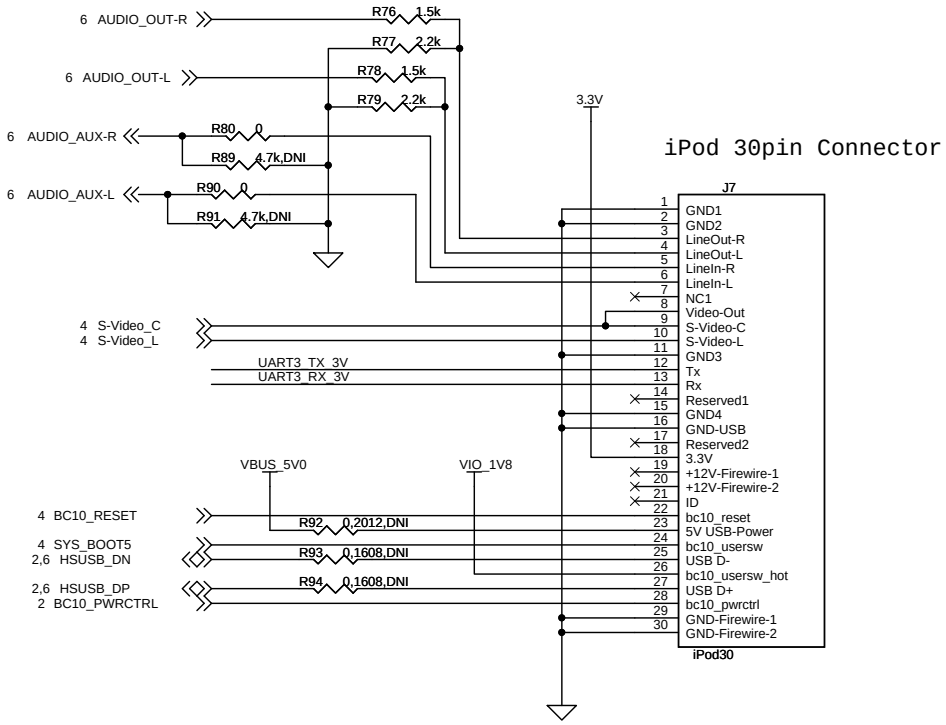

SD (SDIO) slot

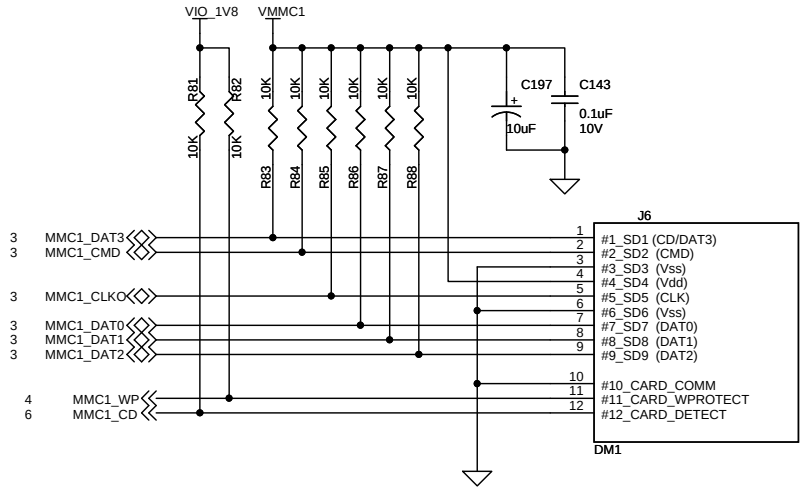

BeatCraft, Inc.

Title	bc10 SD, uSD, iPod30pin	
Size B	Document Number bc10-001-0003	Rev 02
Date: Wednesday, August 11, 2010	Sheet 9 of 13	

DVI-D Interface

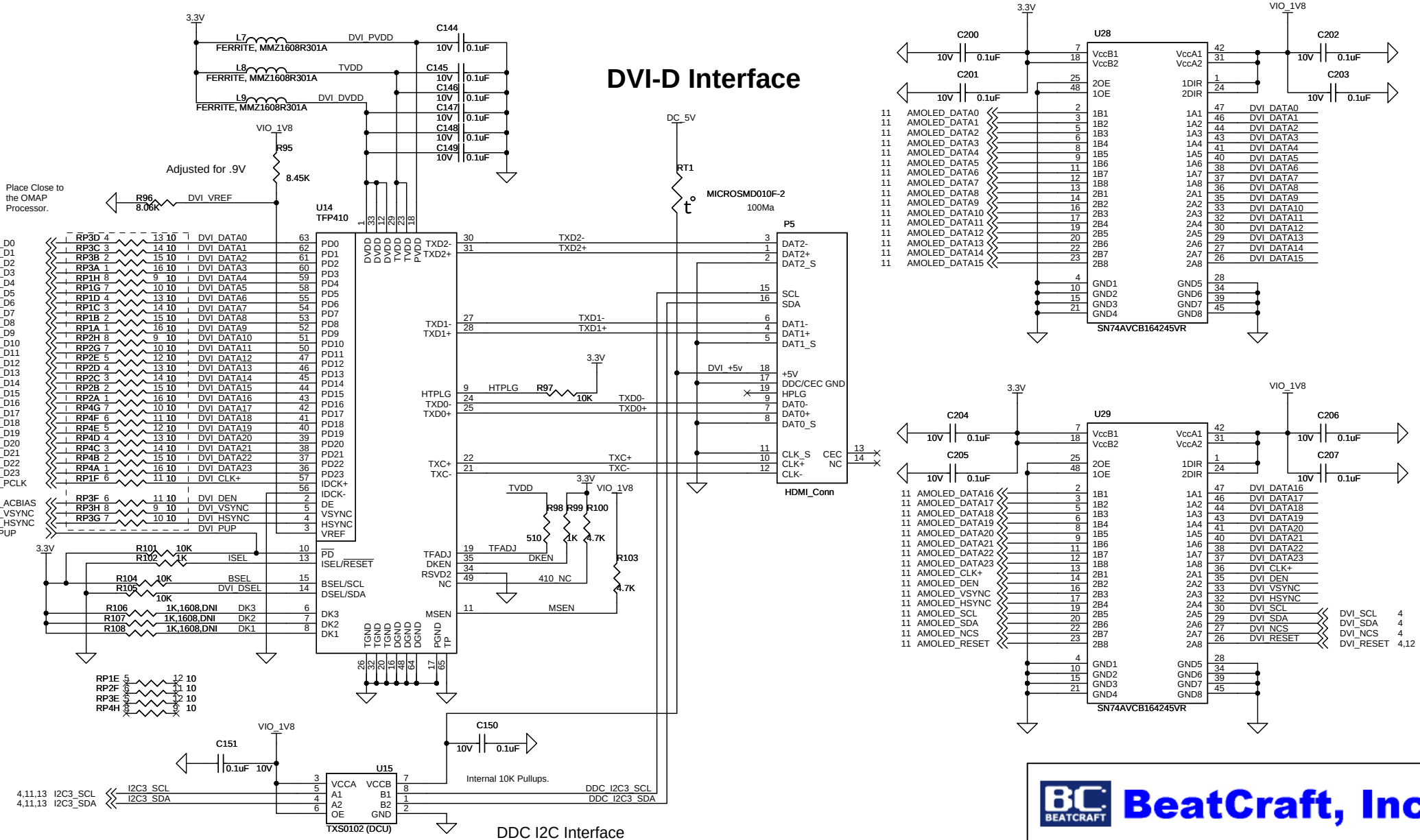

BeatCraft, Inc.

Title	bc10 DVI-D Interface	
Size B	Document Number bc10-001-0003	Rev 02
Date: Wednesday, August 11, 2010	Sheet 10 of 13	

4Wire Touch Screen Interface

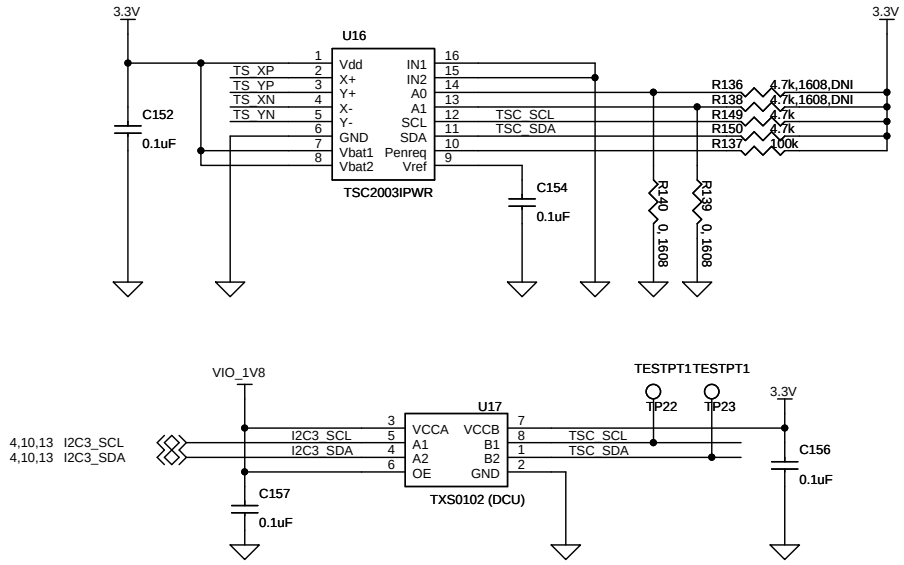

AMOLED Interface

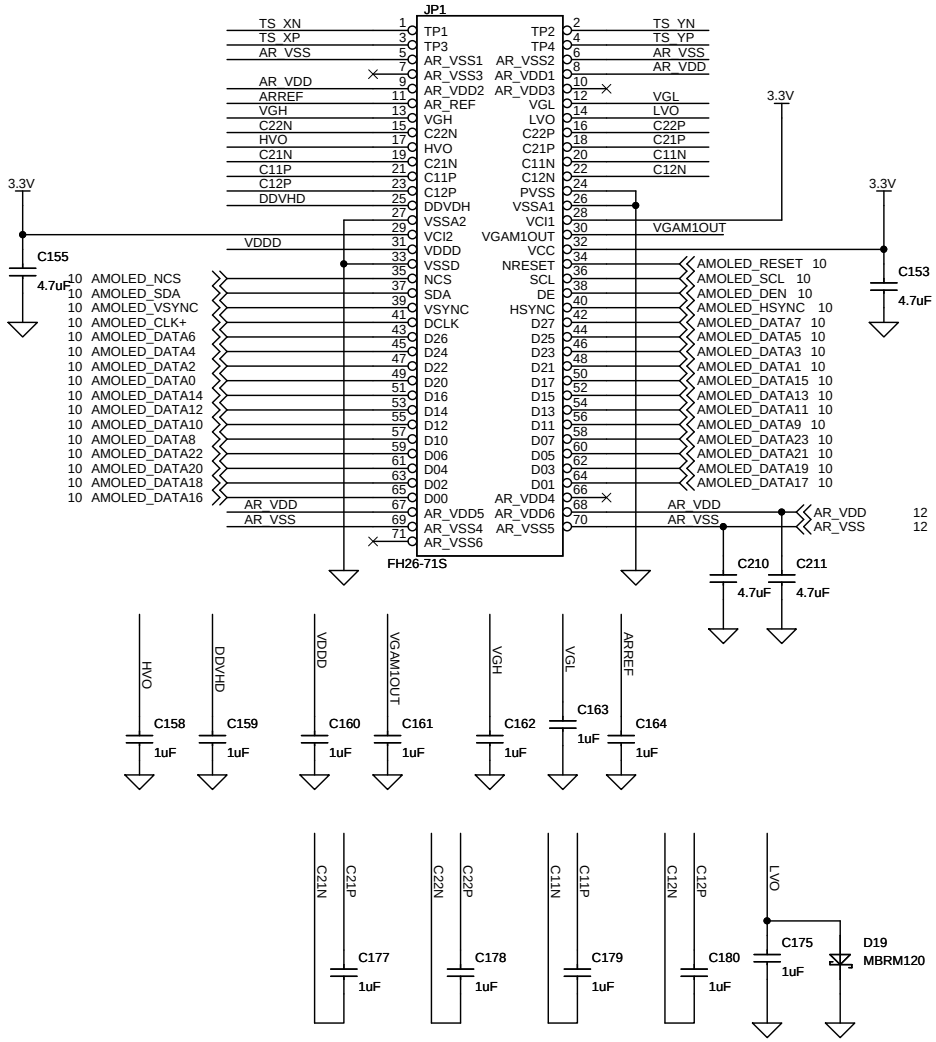

BeatCraft, Inc.

Title	bc10 AMOLED Interface	
Size B	Document Number bc10-001-0003	Rev 02
Date: Wednesday, August 11, 2010	Sheet 11 of 13	

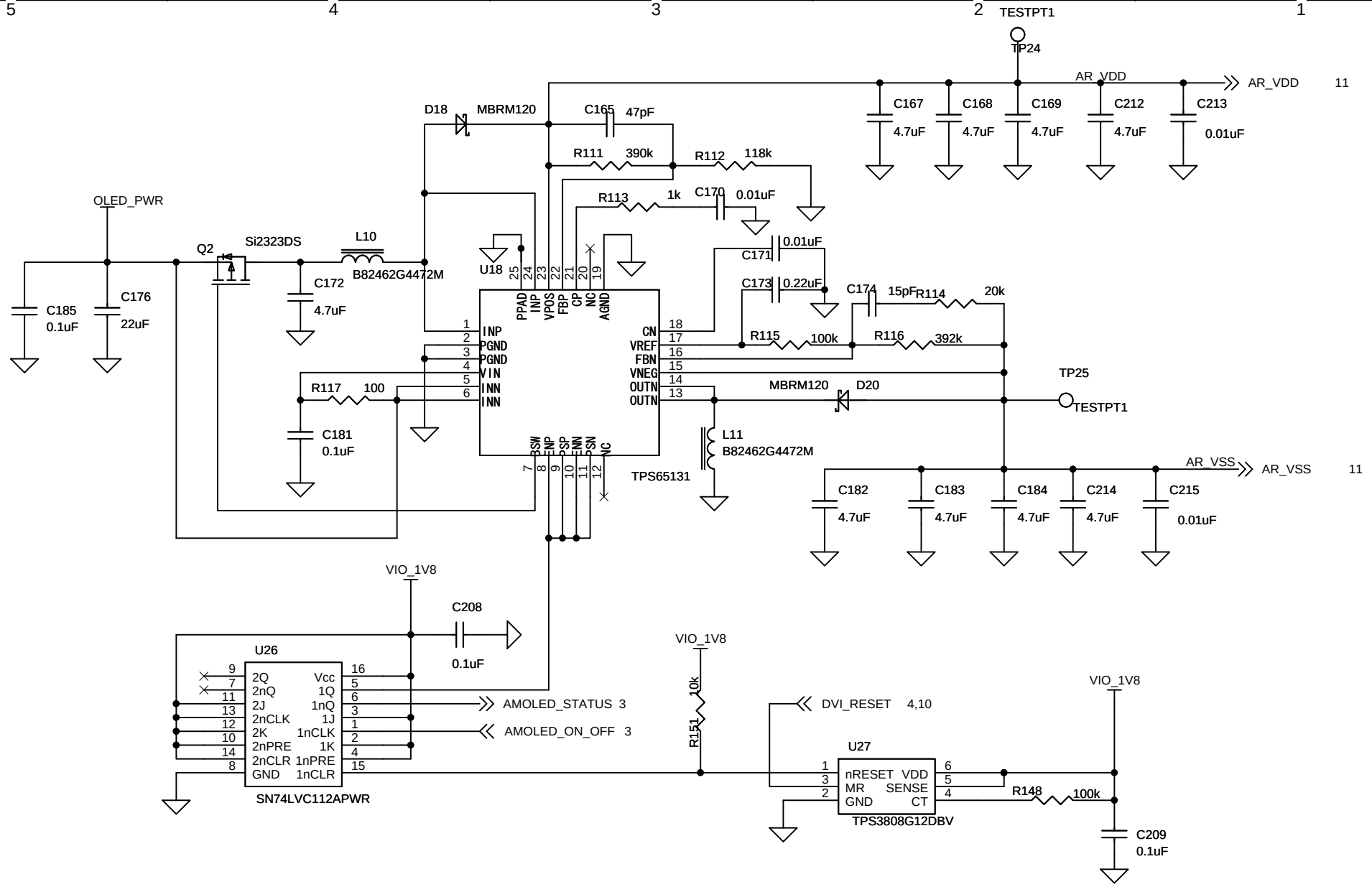

BeatCraft, Inc.

Title	bc10 AMOLED Power Supply	
Size A4	Document Number bc10-001-0003	Rev 02
Date: Wednesday, August 11, 2010	Sheet 12 of 13	

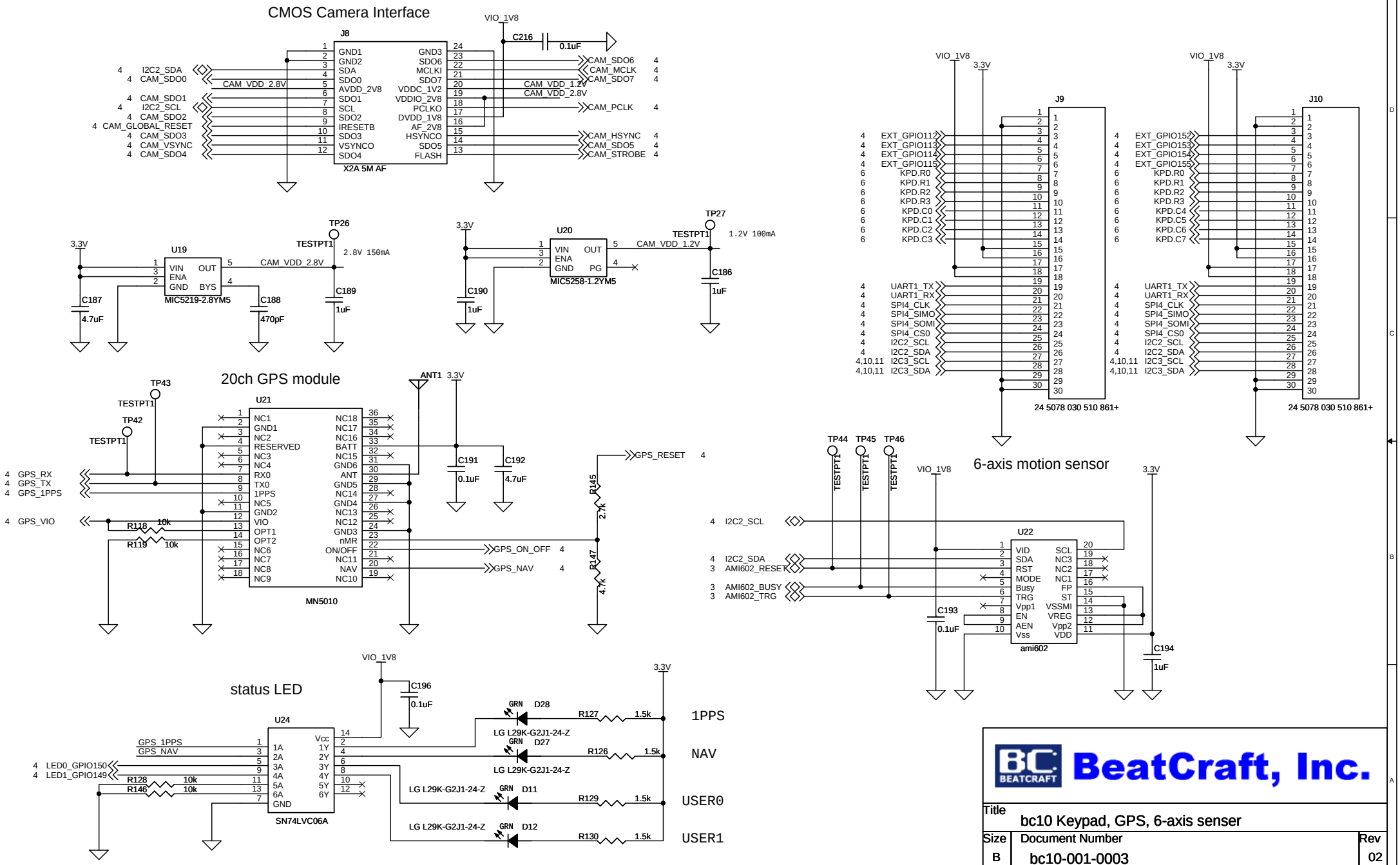
CMOS Camera Interface
J8
X2A 5M AF
VIO_1V8
C216
0.1uF
CAM_VDD_2.8V
CAM_VDD_1.2V
CAM_VDD_2.8V
I2C2_SDA
CAM_SDO0
CAM_SDO1
I2C2_SCL
CAM_SDO2
CAM_GLOBAL_RESET
CAM_SDO3
CAM_VSYNC
CAM_SDO4
CAM_SDO6
CAM_MCLK
CAM_SDO7
CAM_PCLK
CAM_HSYNC
CAM_SDO5
CAM_STROBE
U19
MIC5219-2.8YM5
TP26
TESTPT1
2.8V 150mA
C187
4.7uF
C188
470pF
C189
1uF
U20
MIC5258-1.2YM5
TP27
1.2V 100mA
C190
1uF
C186
1uF
20ch GPS module
U21
MN5010
TP43
TP42
ANT1
C191
0.1uF
C192
4.7uF
GPS_RX
GPS_TX
GPS_1PPS
GPS_VIO
R118
10k
R119
10k
GPS_RESET
GPS_ON_OFF
GPS_NAV
R145
2.7k
R147
4.7k
J9
J10
24 5078 030 510 861+
EXT_GPIO112
EXT_GPIO113
EXT_GPIO114
EXT_GPIO115
KPD.R0
KPD.R1
KPD.R2
KPD.R3
KPD.C0
KPD.C1
KPD.C2
KPD.C3
KPD.C4
KPD.C5
KPD.C6
KPD.C7
UART1_TX
UART1_RX
SPI4_CLK
SPI4_SIMO
SPI4_SOMI
SPI4_CS0
I2C2_SCL
I2C2_SDA
I2C3_SCL
I2C3_SDA
6-axis motion sensor
U22
ami602
TP44
TP45
TP46
AMI602_RESET
AMI602_BUSY
AMI602_TRG
C193
0.1uF
C194
1uF
status LED
U24
SN74LVC06A
C196
0.1uF
GPS_1PPS
GPS_NAV
LED0_GPIO150
LED1_GPIO149
R128
10k
R146
10k
D28
D27
D11
D12
LG L29K-G2J1-24-Z
R127
R126
R129
R130
1.5k
1PPS
NAV
USER0
USER1
BeatCraft, Inc.
Title
bc10 Keypad, GPS, 6-axis senser
Size
B
Document Number
bc10-001-0003
Rev
02
Date:
Wednesday, August 11, 2010
Sheet
13
of
13